IFP7550-5 Silkscreen

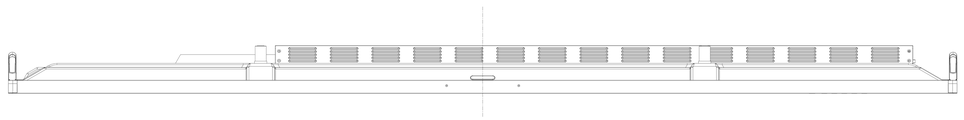

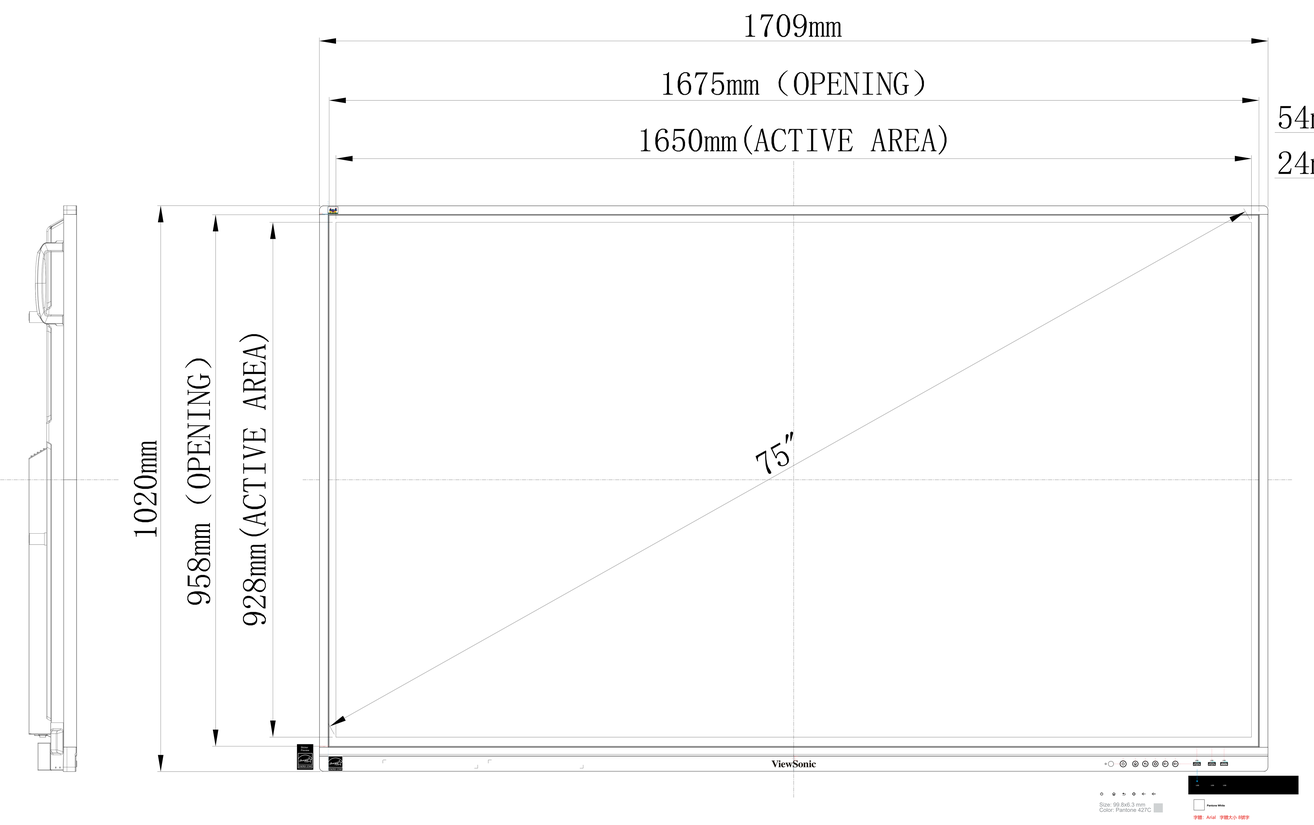

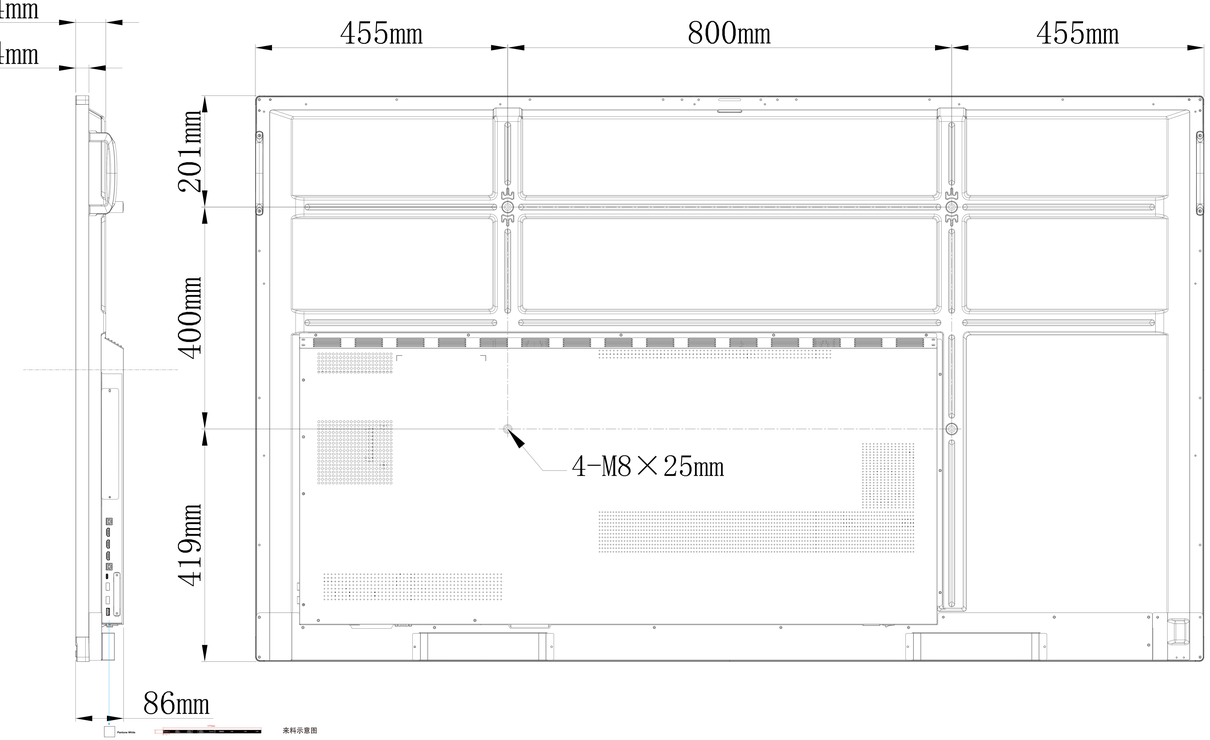

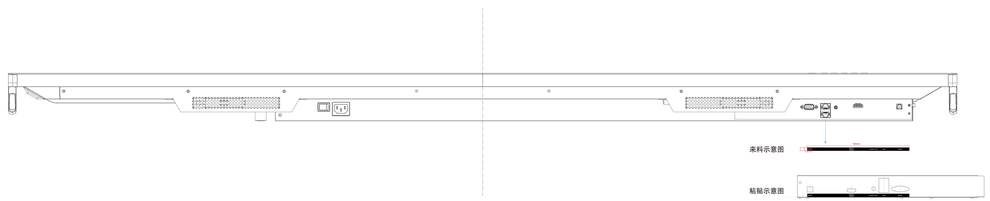

ViewSonic *Model Name:* *IFP7550-5* Product color:	Silkscreen Description:	Graphic: Scale: 1:1 ViewSonic Size: 80x12.5 mm Silver Plate No.: E215-080-W Size: 19.3x12.7 mm Size: 99x27 mm Pantone Black Pantone White Size: 99.8x6.3 mm Color: Pantone 427C		
UNIT: mm	Scale: 1:1	Date: 9/27/2022	DCN #: VS-D