SWEDX
Your Digital Signage Partner

SWLT-50K8-A1-V2 & SWLT-50K8-A2-V2 Technical Drawing

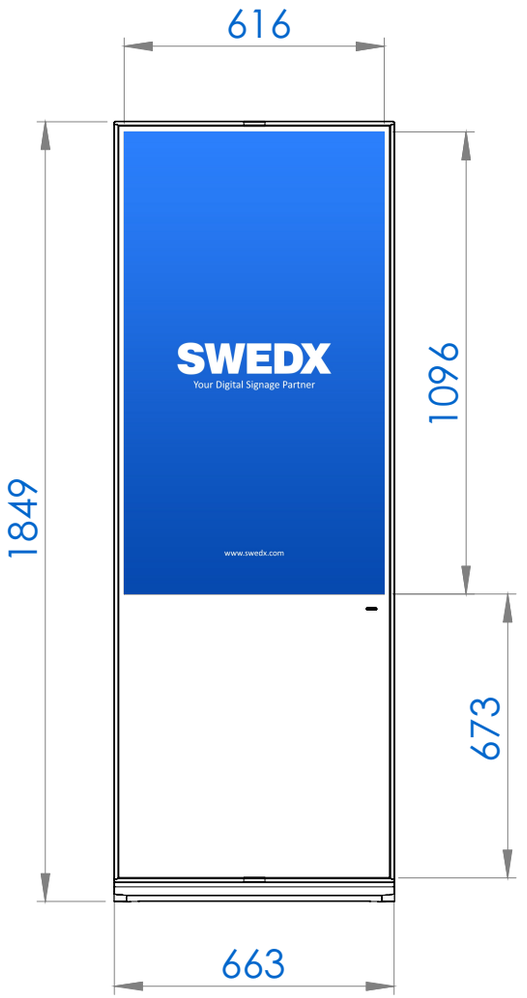

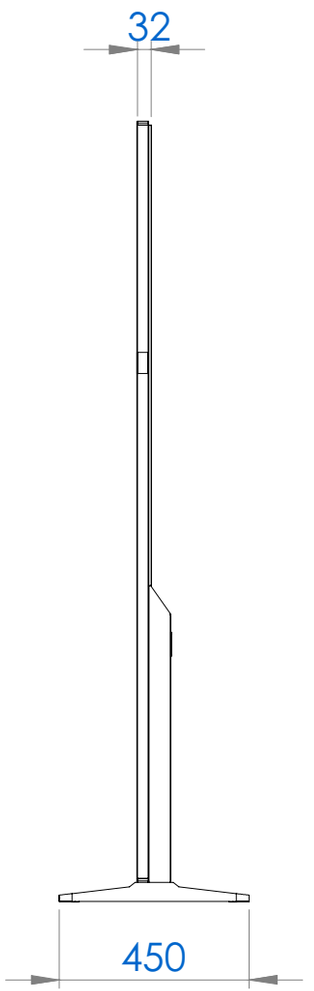

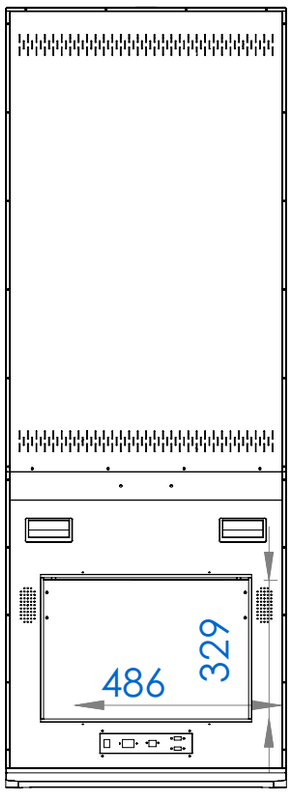

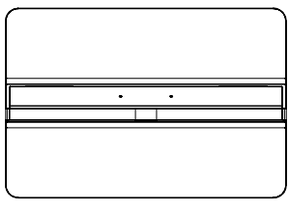

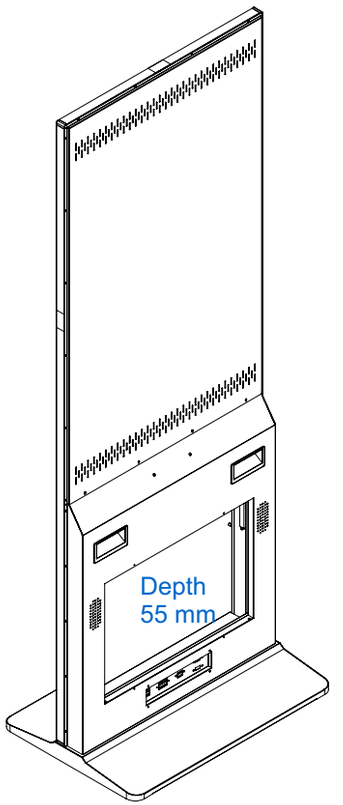

Units: mm

SWEDX Fagerstagatan 9 • 163 53 Spånga • ☎: +46 (8) 441 8 444 • 🖂: www.swedx.com • 🖂: info@swedx.com